The Petite Heirloom™

Design | Technology | Innovation

BRIGGS®

The Petite Heirloom™

22” x 18” Oval
Pedestal Lavatory

6673

FEATURES

- Victorian design
- Compact basin
- Concealed front overflow
- Stain-resistant vitreous china
- Plumbing concealed in pedestal
- 4” centers
- 5-year warranty

AVAILABLE COLORS

WHITE (130) | BISCUIT (235) | BONE (733)

SPECIFICATIONS

- Model 6673: 4” centers; consists of lavatory basin (Model 6654), 40 lb, and pedestal leg (Model 6689), 20 lb

SUGGESTED FITTINGS*

Sayco-Ceram™ Lavatory Faucets
4” centers
2409
2409BW
2430

- See the Sayco® Suggested List Price Guide for available handle kits

* Fittings not included. Refer to the Sayco Catalog for more information.

INSTALLATION

- Installation instructions supplied

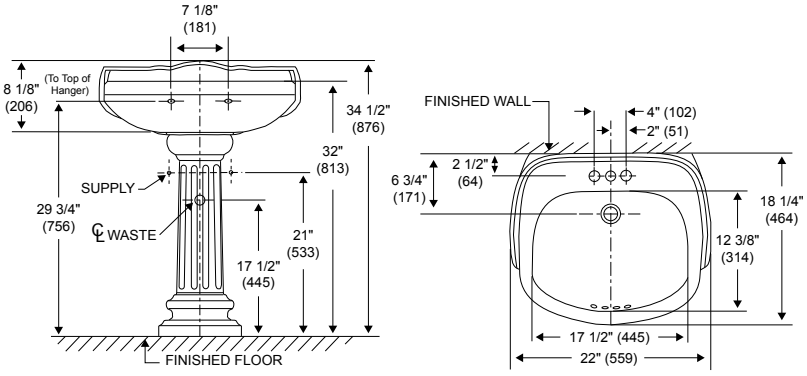

Dimensions may vary (+) or (–) 1/4”. Dimensions shown in parentheses are in millimeters: 25.4 mm = 1 inch. Note: Fixture dimensions are nominal and conform with dimension and performance requirements of ASME/ANSI Standards A112.19.2M. Dimensions subject to change or cancellation without notice. Briggs is not responsible for the use of superseded or voided specification information.

Design | Technology | Innovation

BRIGGS®

(800) 888-4458
www.briggsindustries.com

© 2006 Briggs Industries, Inc.